DESCRIPTION	REF. NO.	DATE	REV.
CD100/150 AI/CIBF POWER FRAME	O–CDPFBS	10/18/10	–

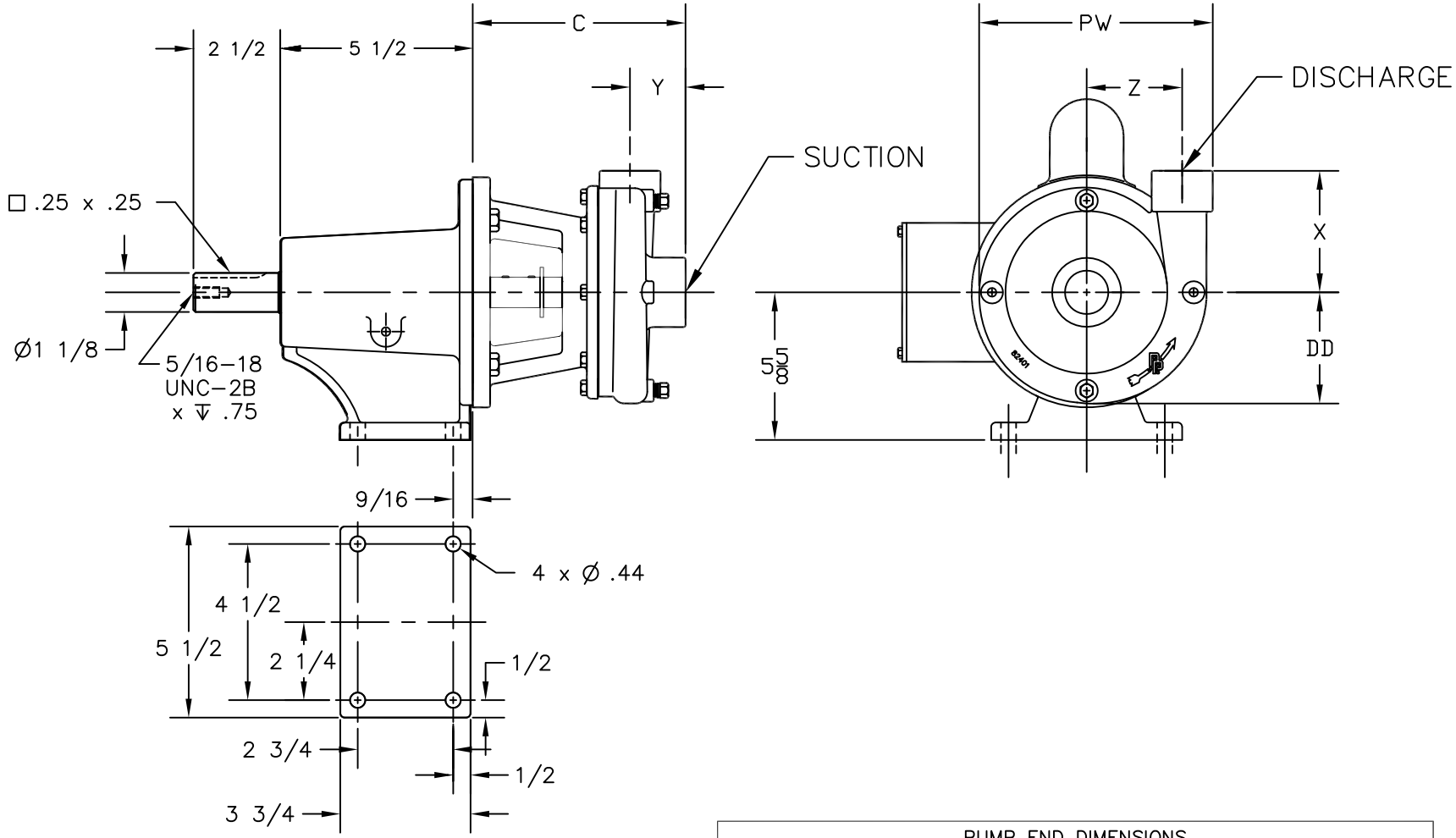

	PUMP END DIMENSIONS							
	C	DD	PW	X	Y	Z	SUCTION	DISCHG
CD100	6 1/16	3 1/2	6 11/16	3 1/2	1 5/8	2 3/4	1 1/4	1"
CD150	6 13/16	3 13/16	7 15/16	3 13/16	2 1/8	3 1/16	2"	1 1/2

NOTE: ALL DIMENSIONS HAVE BEEN ROUNDED TO THE NEAREST 1/16".

20101018.121

PRICE PUMP CO.

FACTORY FAX TRANSMITTAL DRAWING

#1 Pump Way P.O. Box Q
Sonoma, CA 95476 (707) 938–8441
707–FAX 938–0764